aTekst

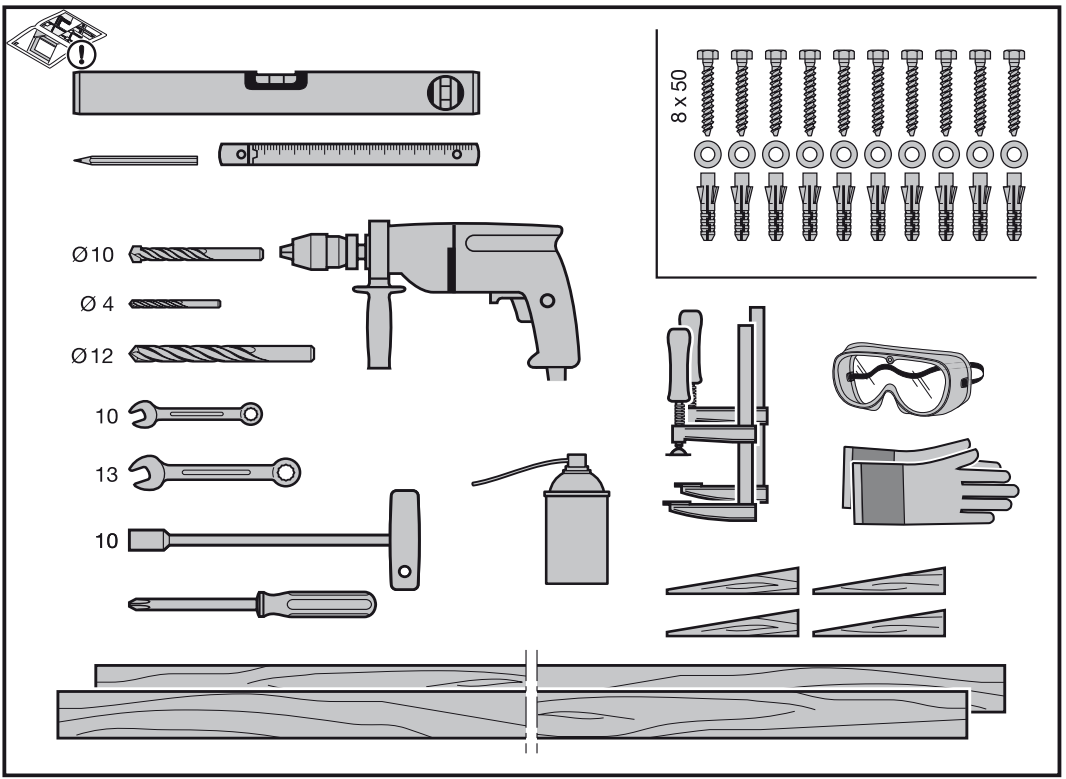

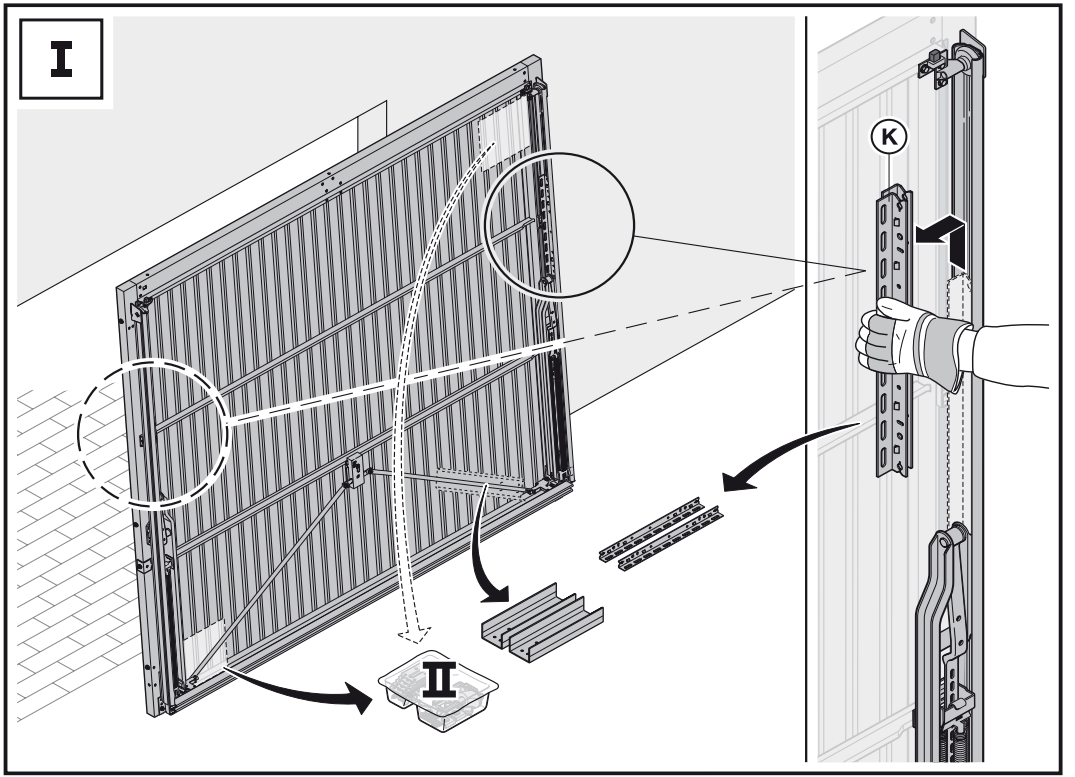
I
K
II

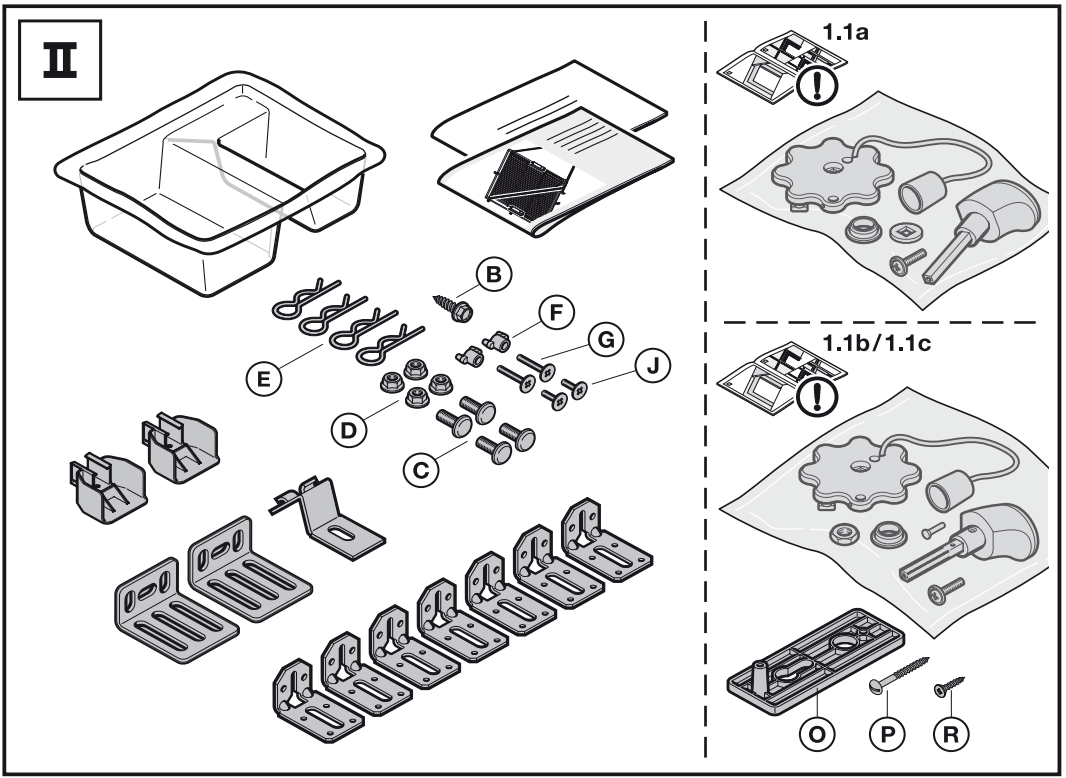
II
1.1a
1.1b/1.1c
B
F
G
J
E
D
C
O
P
R

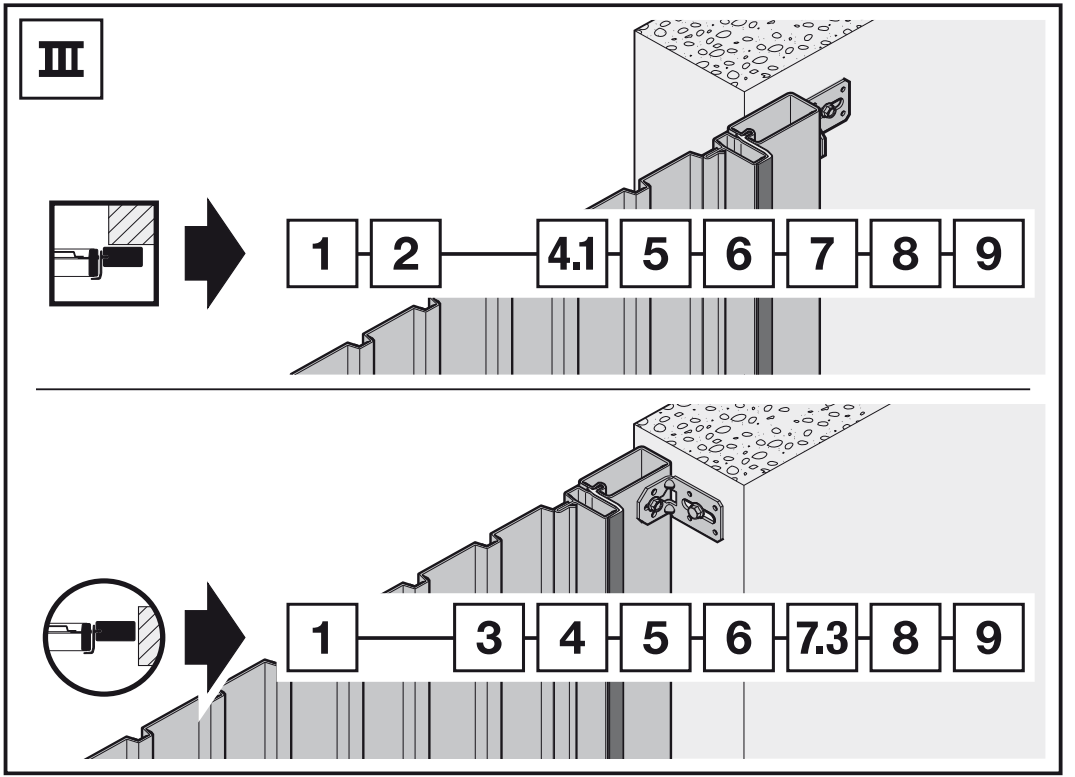
III
1
2
4.1
5
6
7
8
9
1
3
4
5
6
7.3
8
9

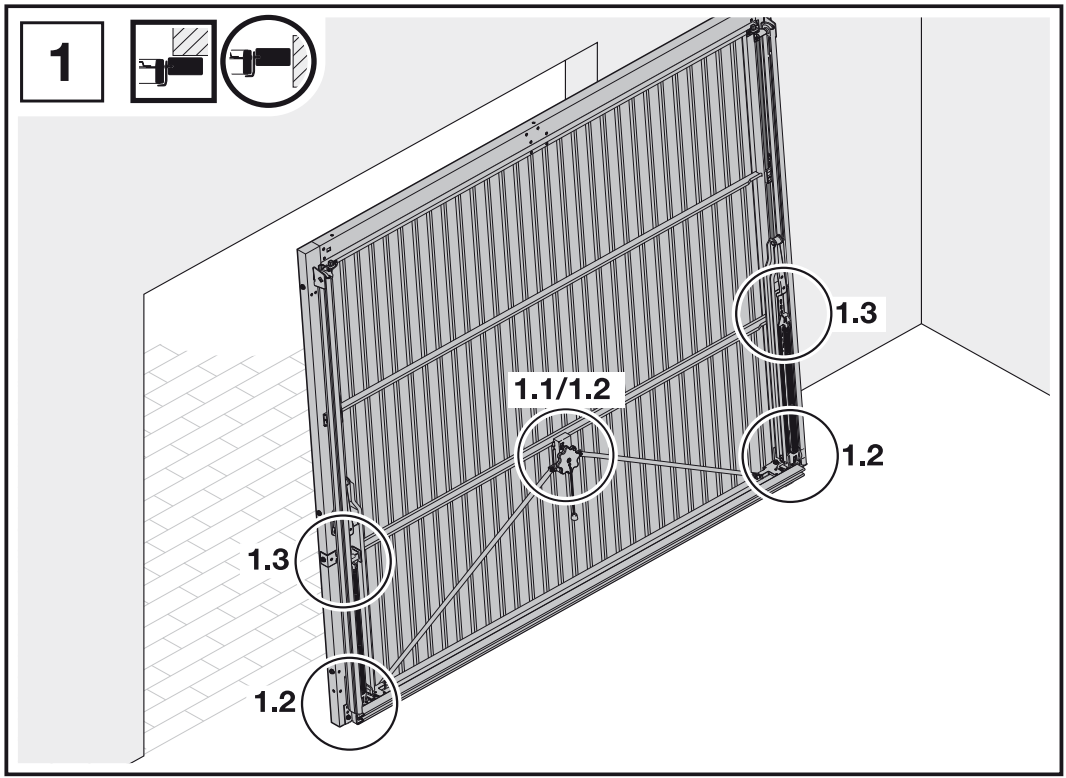
1
1.3
1.1/1.2
1.2
1.3
1.2

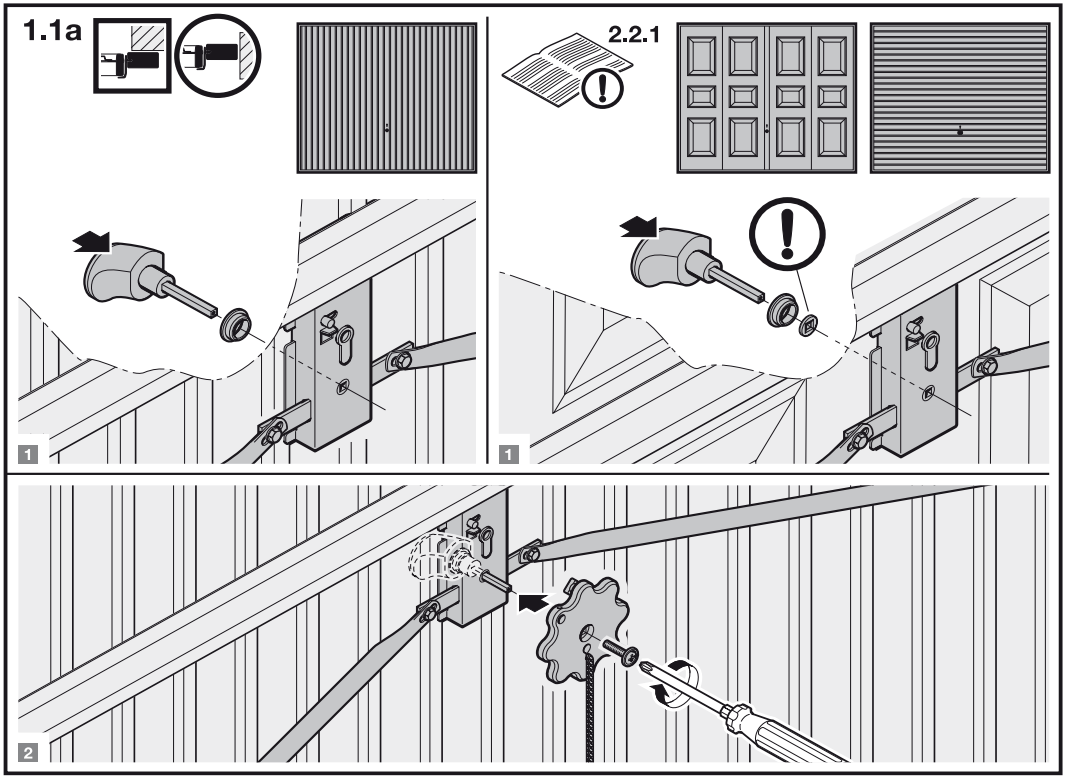
1.1a
2.2.1
1
1
2

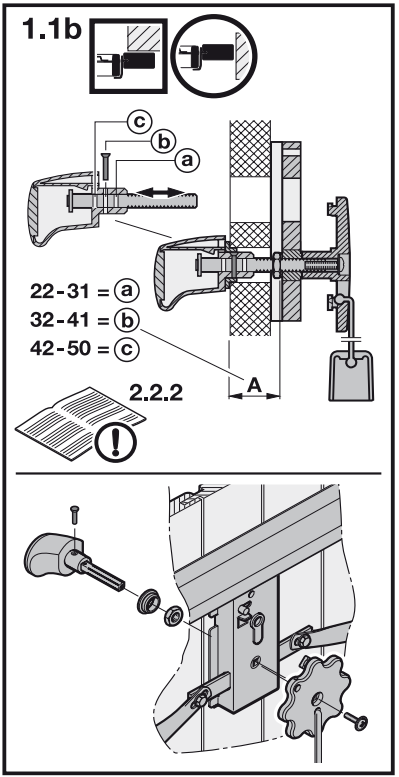
1.1b
c
b
a
22-31 = a
32-41 = b
42-50 = c
A
2.2.2

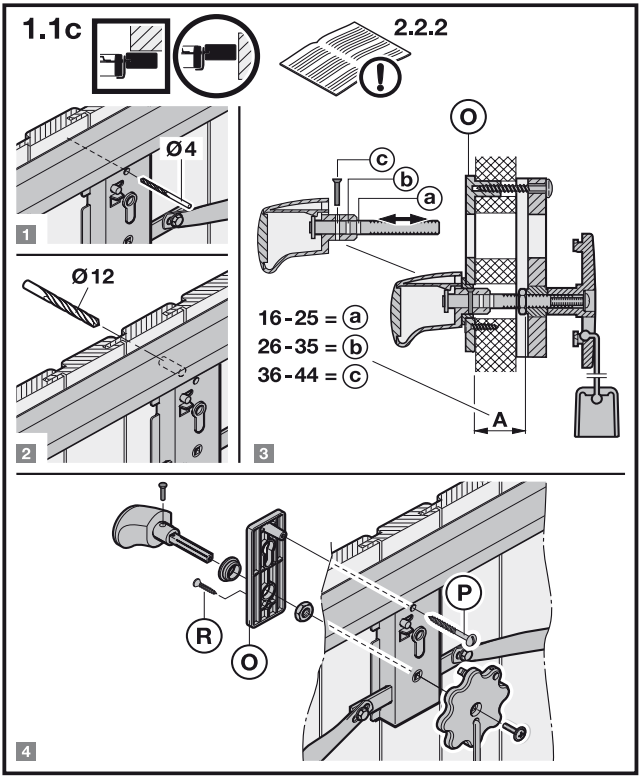
1.1c
2.2.2
Ø4
1
Ø12
2
O
c
b
a
16-25 = a
26-35 = b
36-44 = c
A
3
R
O
P
4

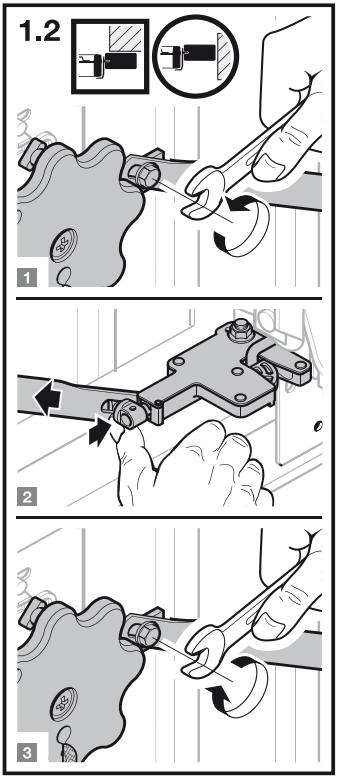
1.2
1
2
3

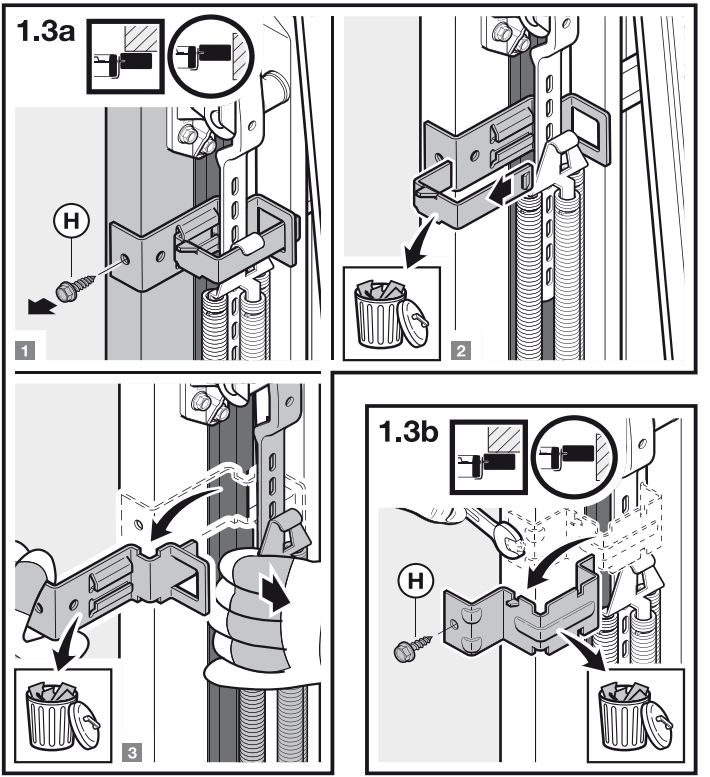
1.3a
H
1
2
3
1.3b
H

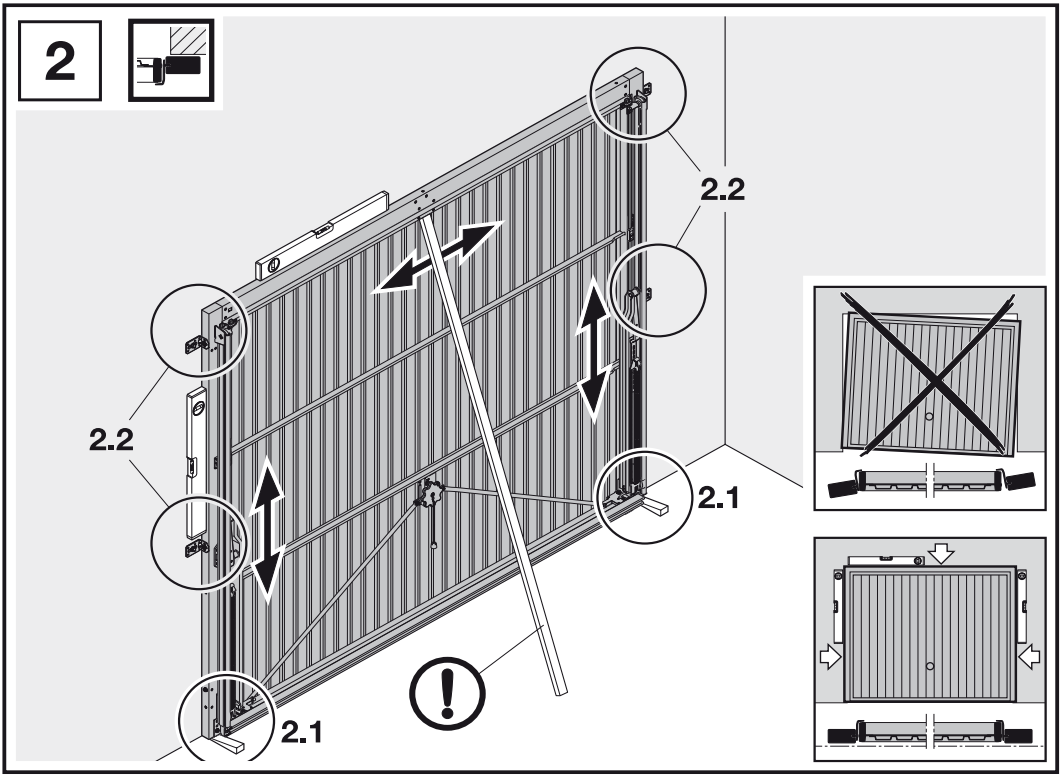
2
2.2
2.2
2.1
2.1

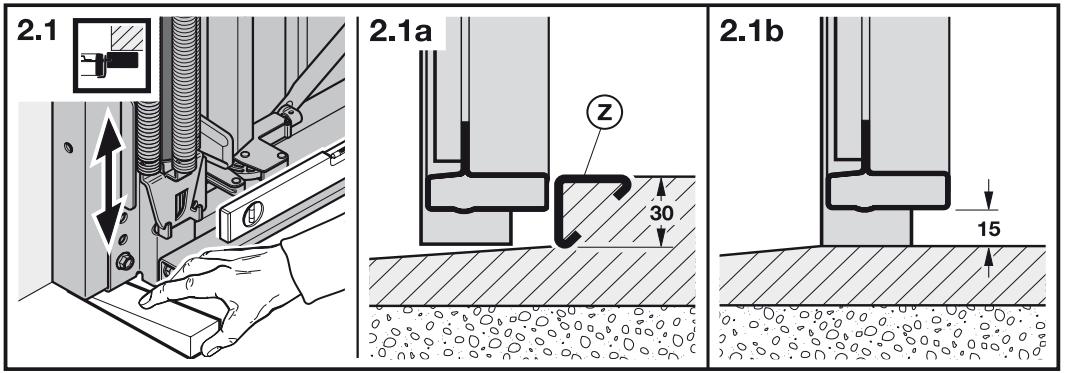
2.1
2.1a
Z
30
2.1b
15

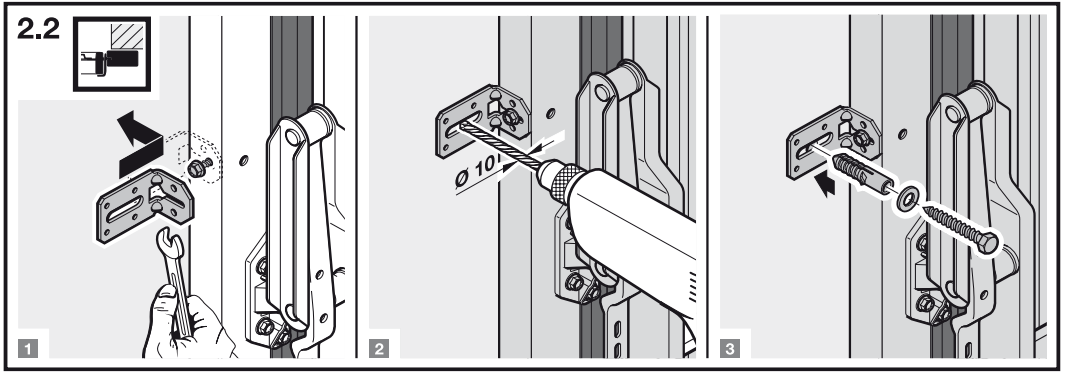
2.2
Ø 10
1
2
3

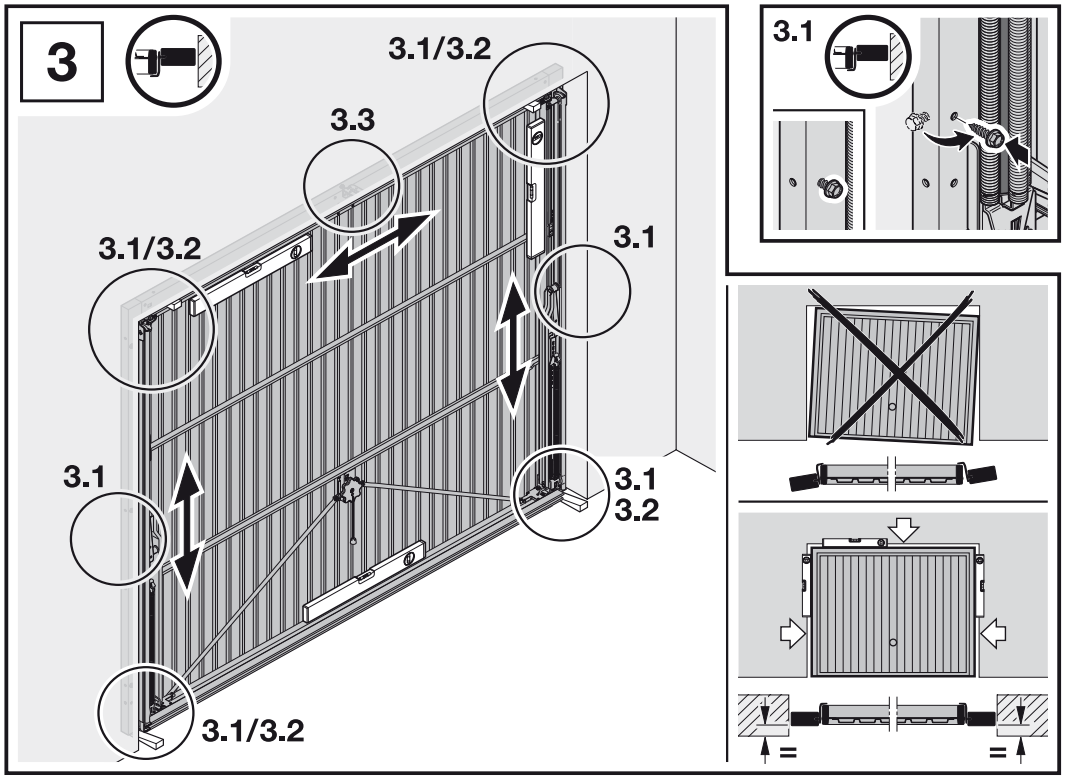
3
3.1/3.2
3.3
3.1/3.2
3.1
3.1
3.1
3.2
3.1/3.2
3.1
=
=

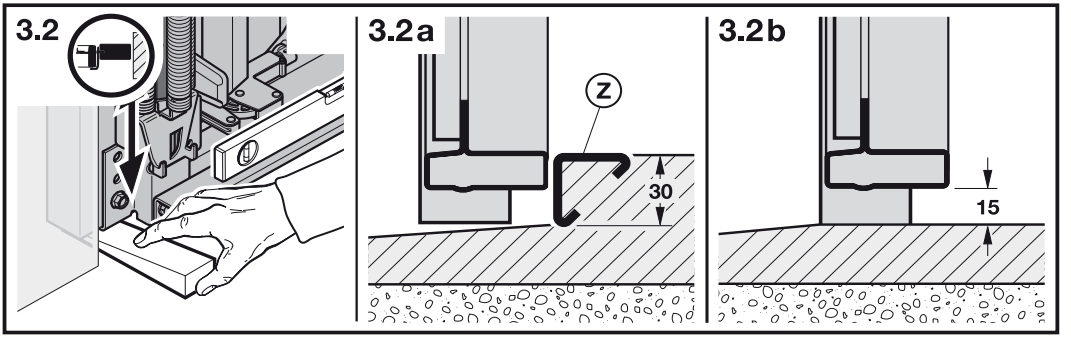
3.2
3.2a
Z
30
3.2b
15

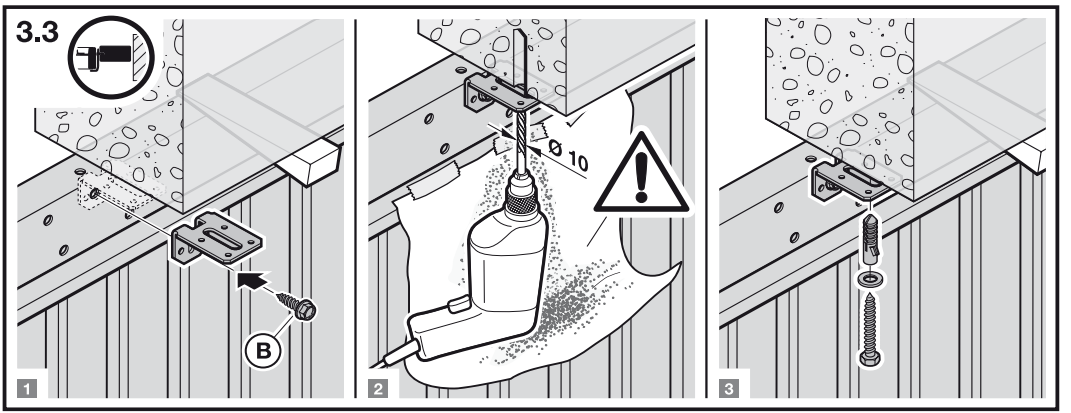
3.3
B
Ø 10
1
2
3

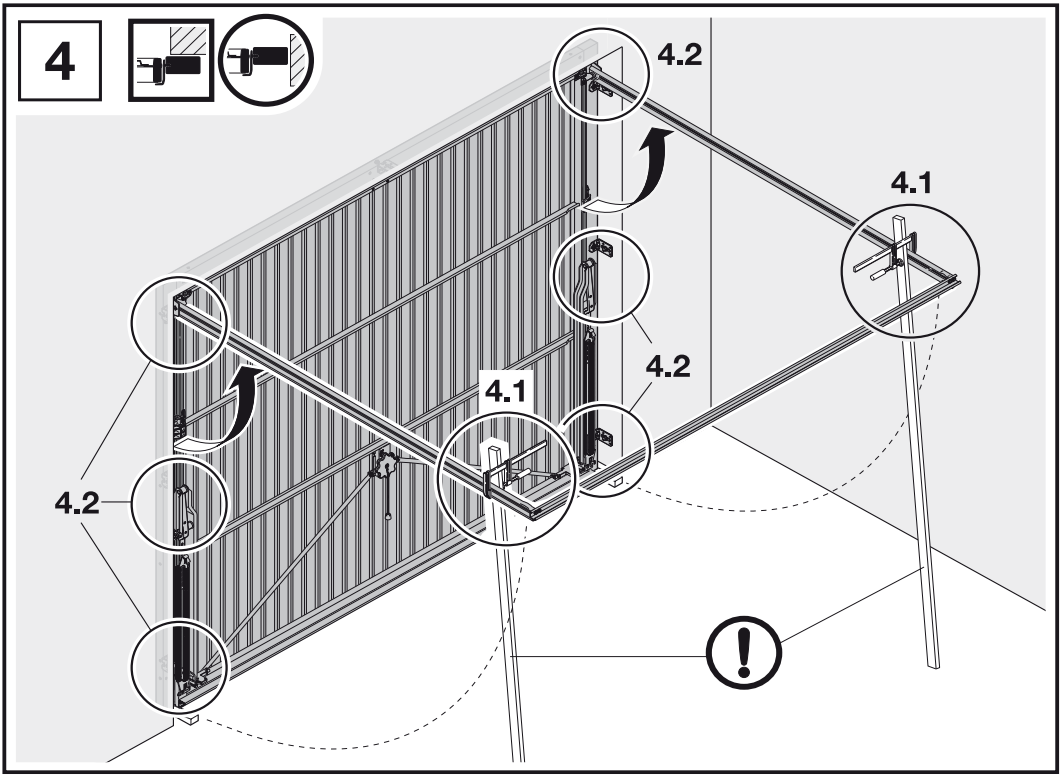
4
4.2
4.1
4.2
4.1
4.2

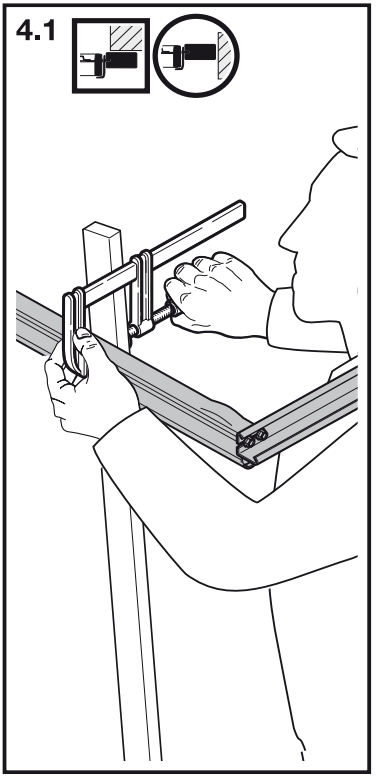
4.1

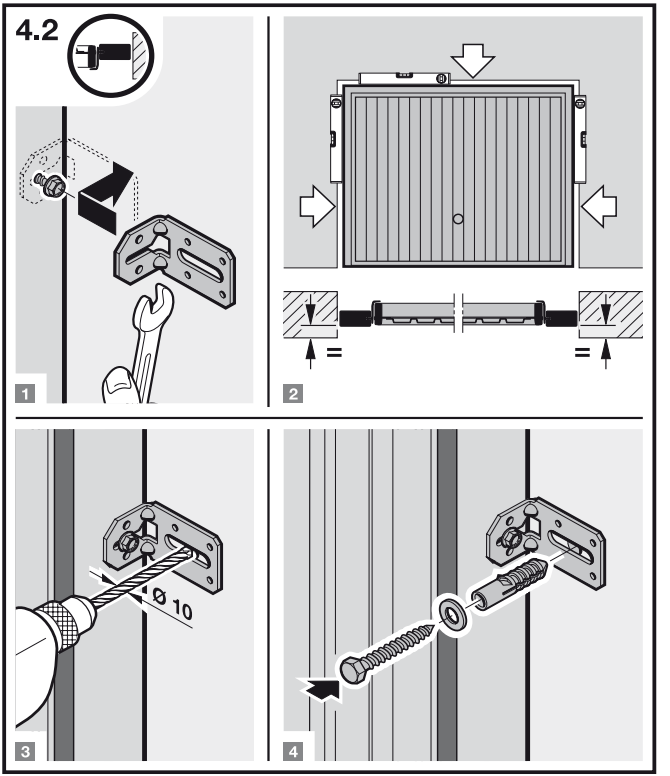
4.2
1
2
3
4
Ø 10

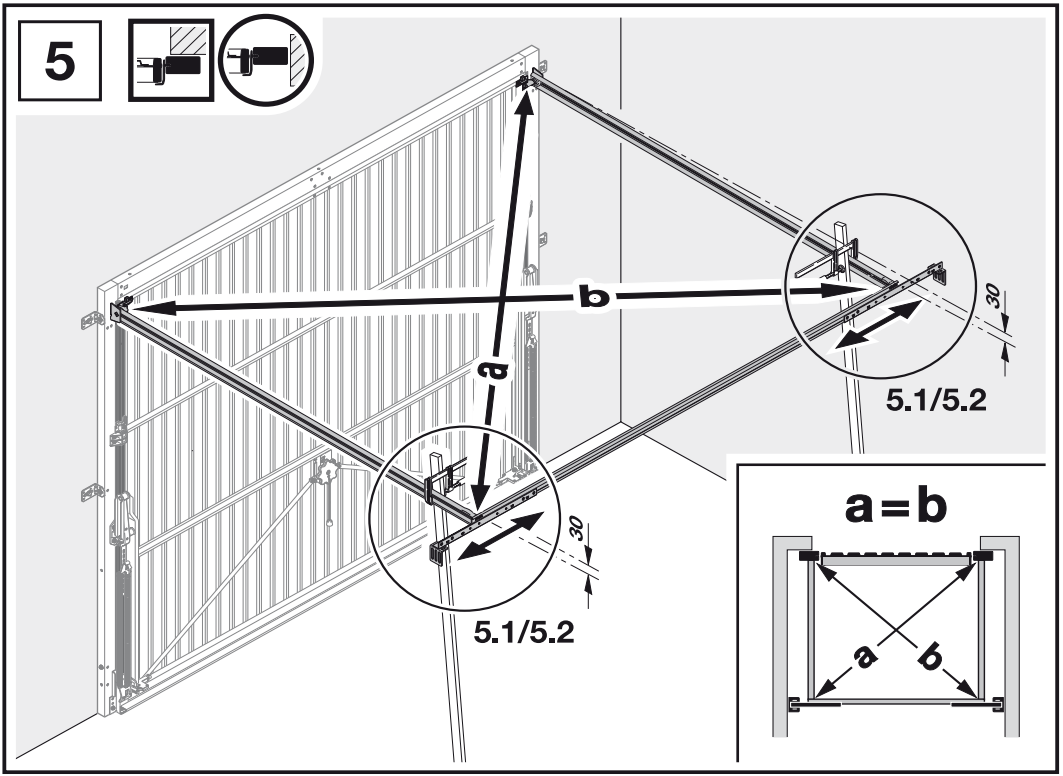
5
a
b
30
5.1/5.2
30
5.1/5.2
a=b
a
b

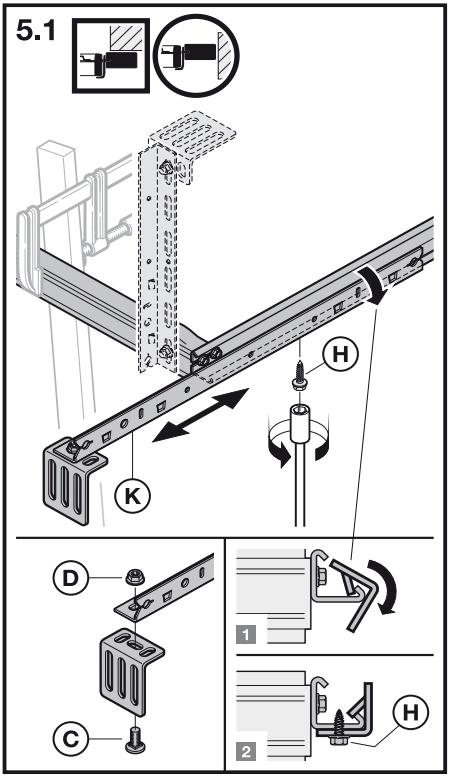
5.1
H
K
D
C
1
2
H

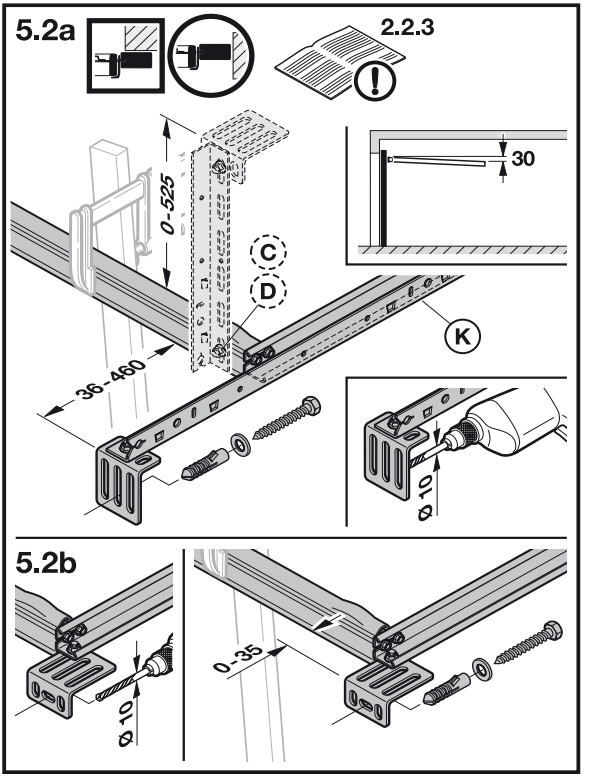
5.2a
2.2.3
30
0-525
C
D
K
36-460
Ø10
5.2b
Ø10
0-35

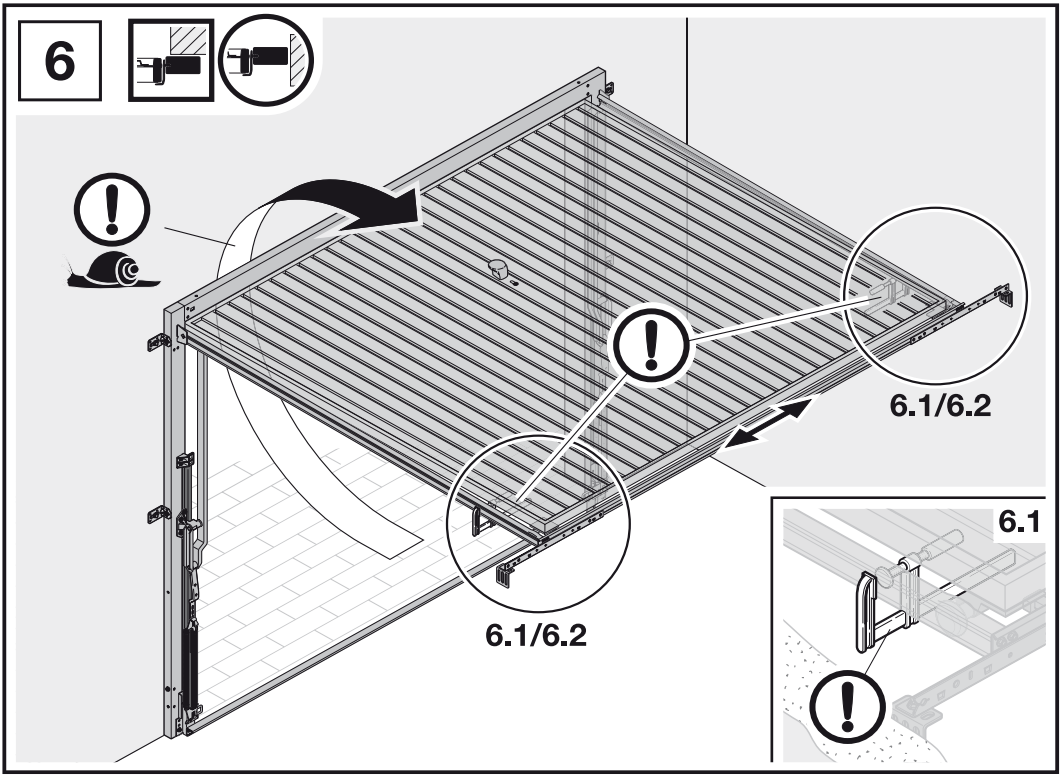
6
6.1/6.2
6.1/6.2
6.1

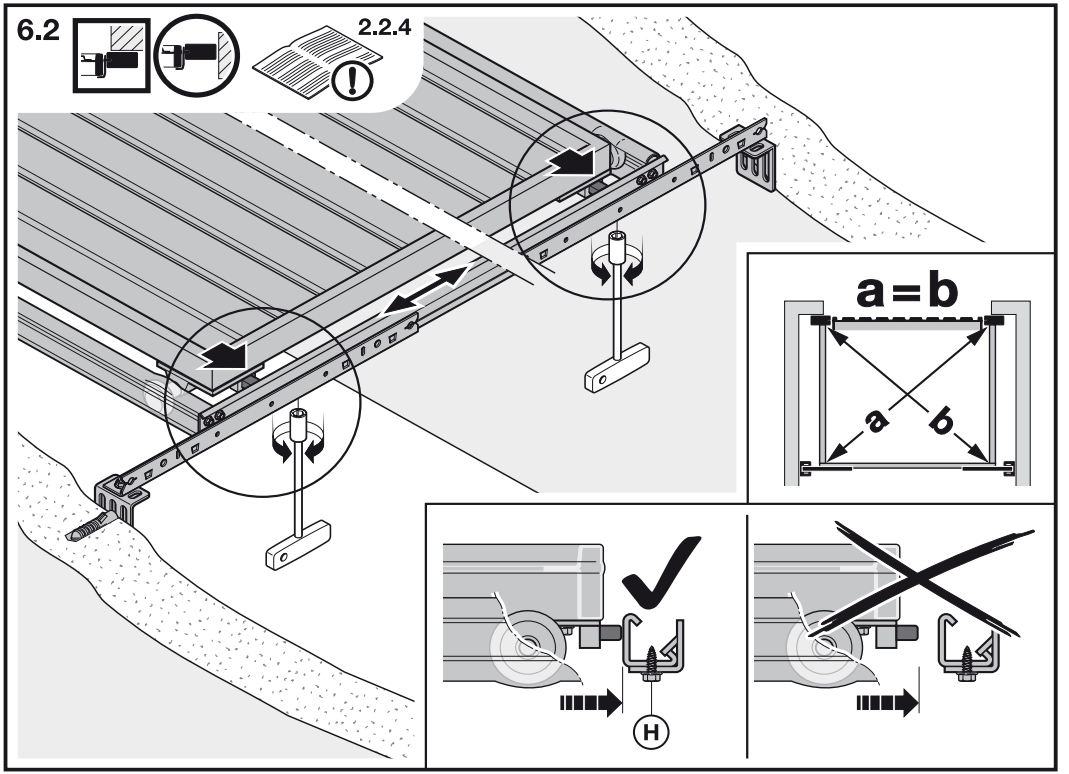
6.2
2.2.4
a=b
a
b
H

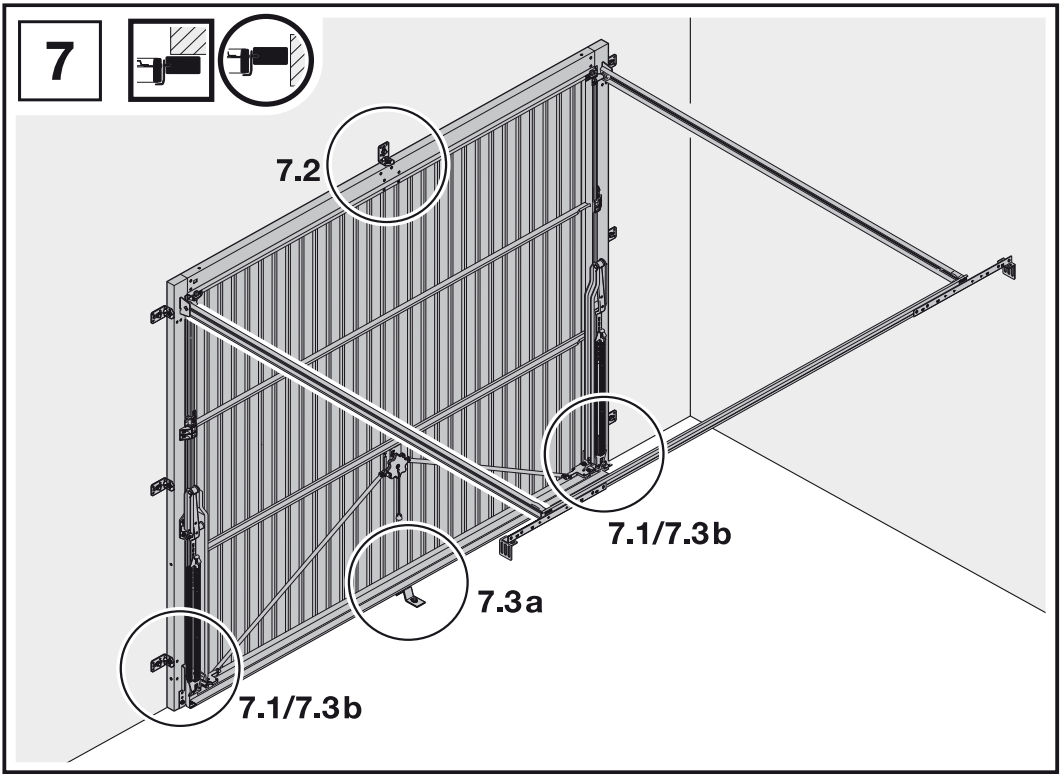
7
7.2
7.1/7.3b
7.3a
7.1/7.3b

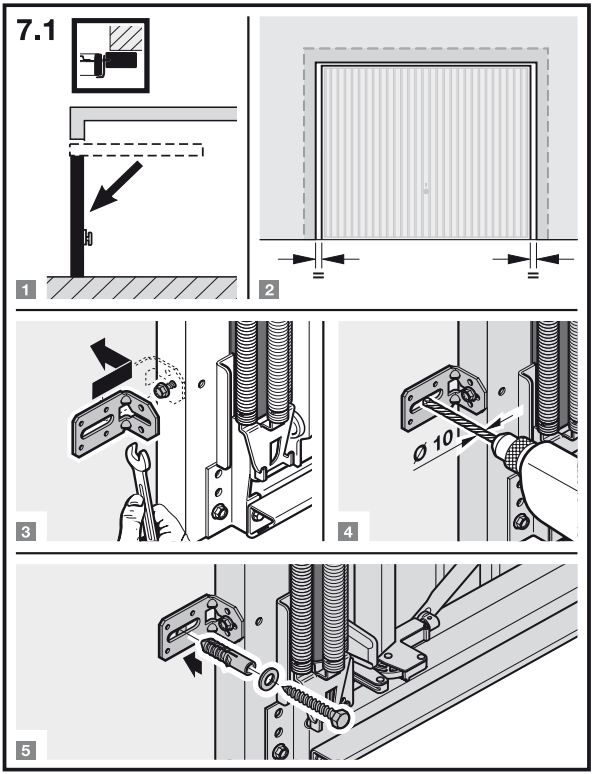
7.1
1
2
3
4
Ø 10
5

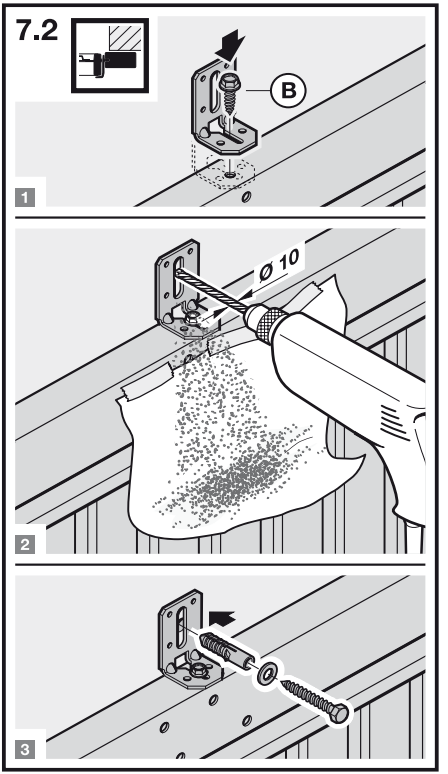
7.2
B
1
Ø 10
2
3

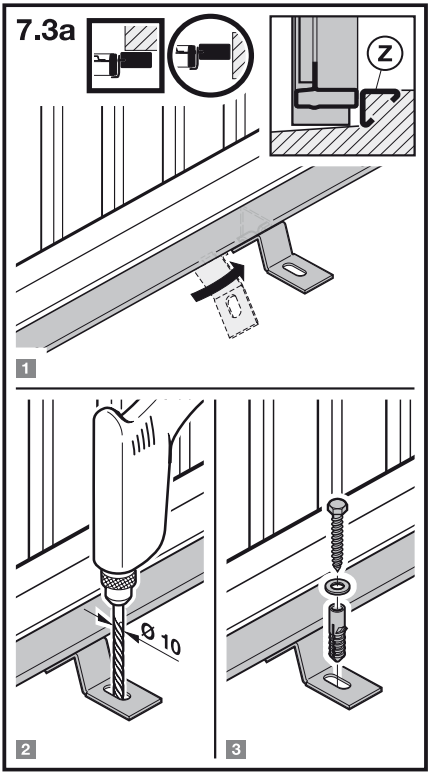
7.3a
Z
1
Ø 10
2
3

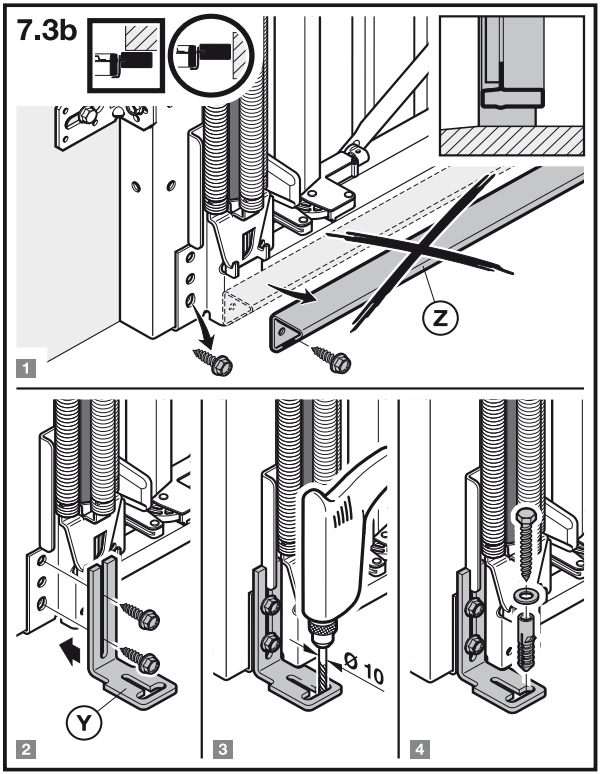
7.3b
Z
1
Y
2
Ø 10
3
4

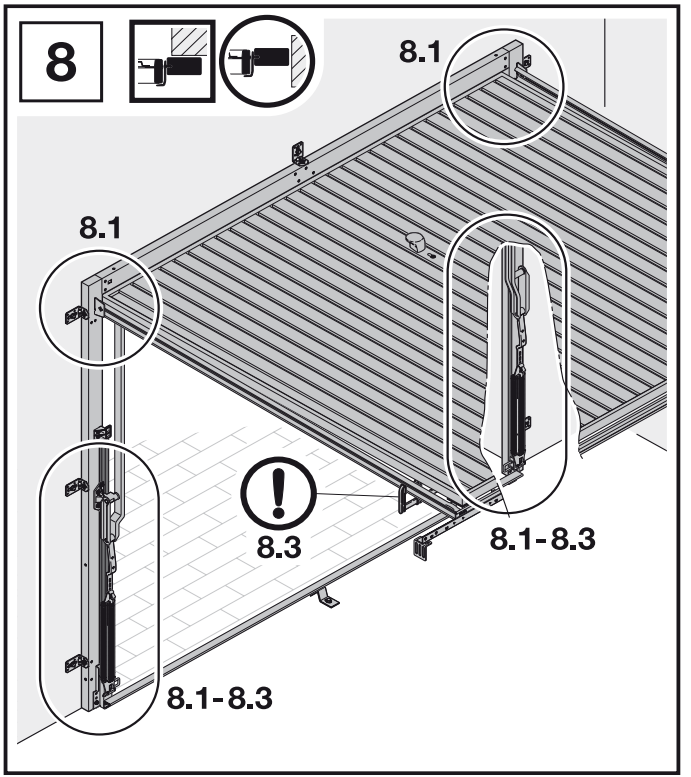
8
8.1
8.1
8.3
8.1-8.3
8.1-8.3

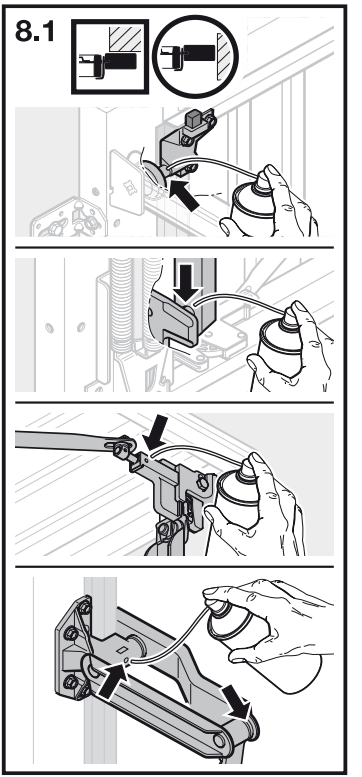
8.1

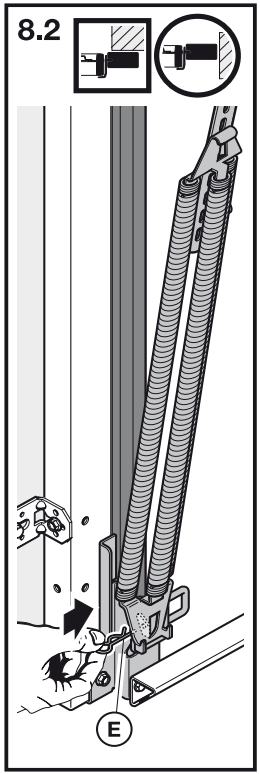
8.2
E

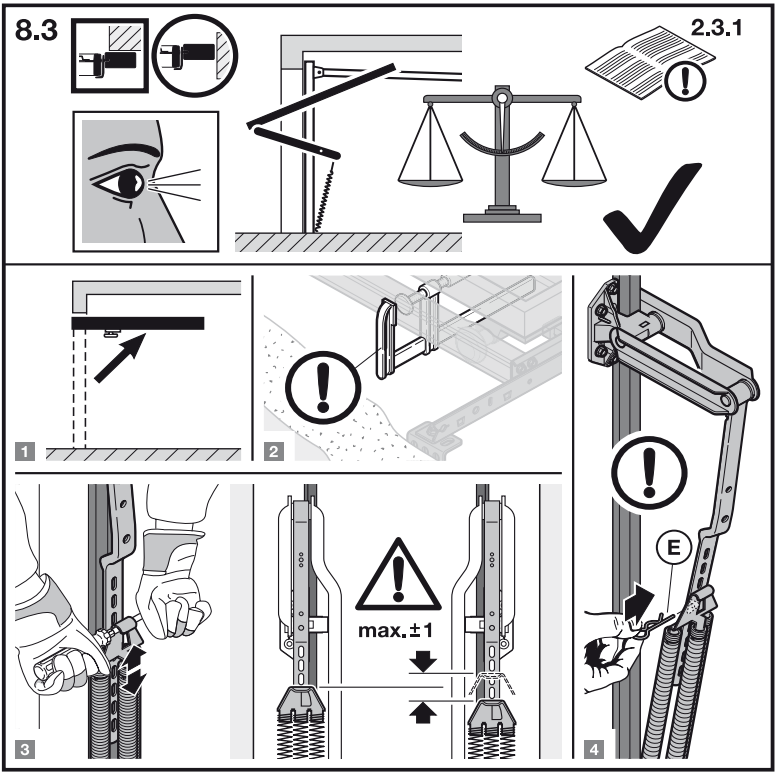
8.3
2.3.1
1
2
3
max. ±1
4
E

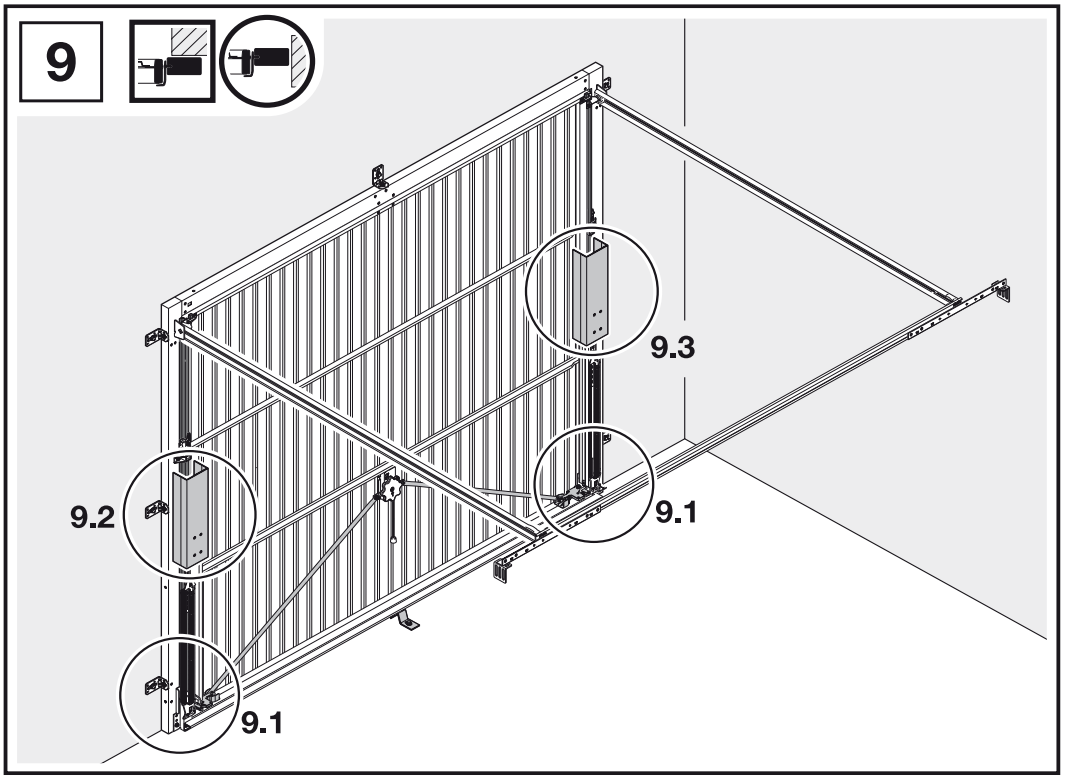
9
9.3
9.2
9.1
9.1

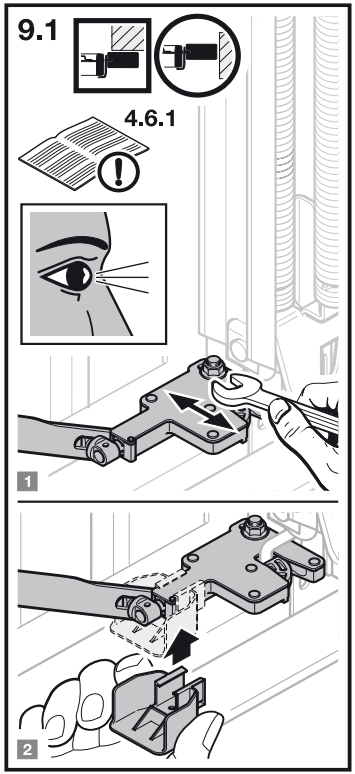
9.1
4.6.1
1
2

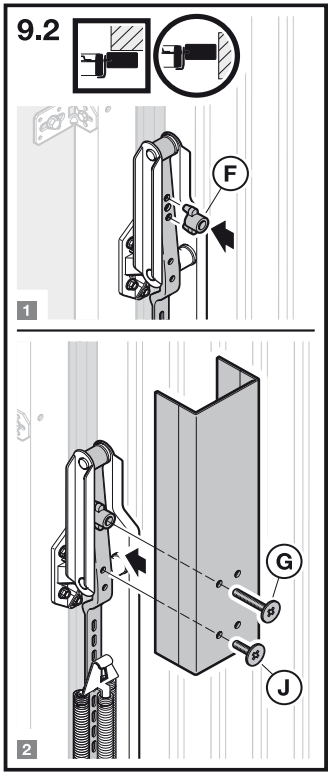
9.2
F
1
G
J
2

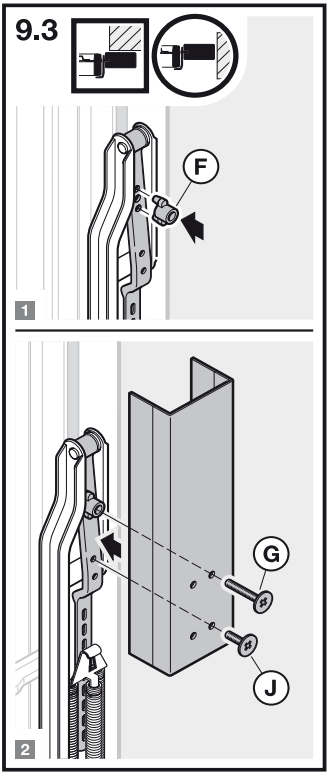
9.3
F
1
G
J
2